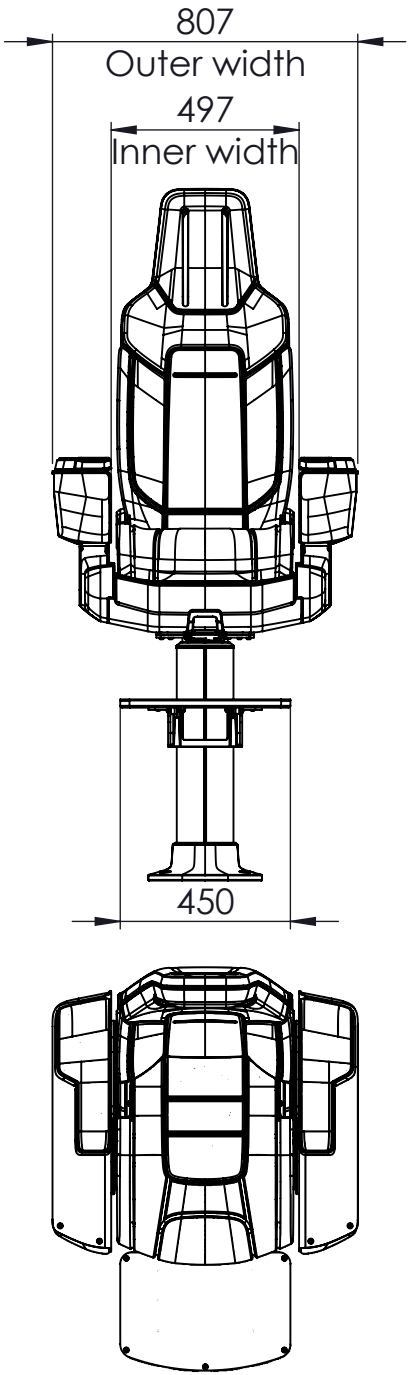

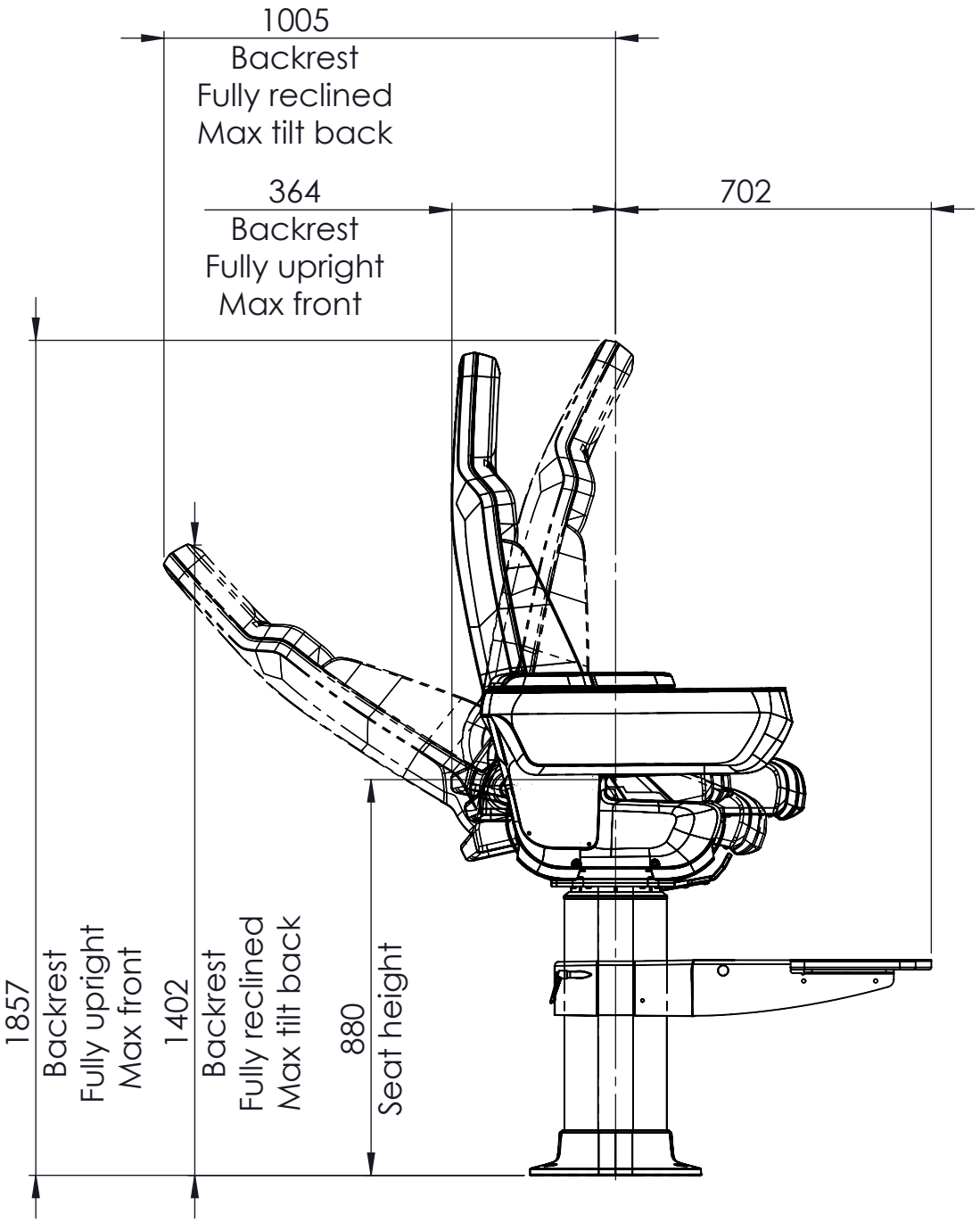

All sitting heights measured without load - a variation may occur depending on the load due to contraction of gas-struts, springs, upholstery and third part equipment.
All information herein contained is subject to change without notice unless under contractual configuration control.
Please consult NorSap if dimensions are critcal or a certified drawing is required.

www.norsap.no

Chair interface:

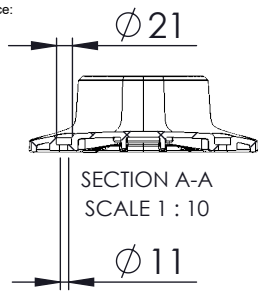

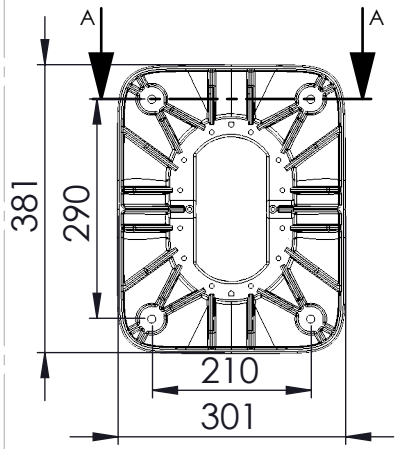

Weight: 101.47

NORSAP

Mjåvannsvegen 45/47
NO 4626 Kristiansand (Norway)

Description:
1800 ActiveM Aluminium back

Art.-No.:	Date:	Revision:
8840	13.12.2019	PROTO 1